PREPARING YOUR LAB

Avio 500 ICP-OES

ICP-Optical Emission Spectroscopy

Preparation Checklist

- Suitable Working Area
- Exhaust Vent
- Vent Positions
- Handling of Gas Cylinders and Other Suggested Safety Practices
- Gases for the Avio 500 ICP-OES
- PlasmaShear
- Drain Vessels
- Location
- Electrical Services
- Cooling Requirements
- Summary: Facilities Required
- Important Accessories and Consumables

The PerkinElmer Avio® 500 ICP-OES instrument is a complete system, with the exception of the following items: suitable working area, exhaust vents, gases and regulators, cooling water, and a computer table or bench. These items must be provided by the analyst.

The ICP-OES system consists of the main instrument, the computer-controller assembly and a printer, the dimensions of which are given in Table 3 (Page 6).

Suitable Working Area

The environment in which any instrument is housed is an important consideration. The instrument will operate with a laboratory temperature between 15 and 35 °C (59-95 °F) with a maximum rate of change of 2.8 °C (5 °F) per hour. For optimum instrument performance, the room temperature should be controlled at 20 +/- 2 °C. The instrument should be located away from direct sources of heat or cold. The relative humidity should be between 20 and 80%, non-condensing.

In order to minimize contamination problems, a relatively dust-free environment is necessary. Maximum dust levels should not exceed 36 million particles (0.5 mm or larger) per cubic meter of air. Failure to operate the instrument in a relatively dust-free environment will necessitate more frequent maintenance and could, eventually, damage the instrument. As a reference, a normal, clean office environment would be 18 to 36 million particles per cubic meter.

Another important consideration is to locate the instrument in an area free of corrosive fumes and excessive vibration. The Avio 500 ICP-OES instrument is bench-mounted and may need to be moved for service and preventative maintenance. Leaving a space of 45 cm (18 in.) between all sides of the instrument and lab walls will facilitate access. If the chiller is located under the instrument table, it must not make contact with any part of the table due to vibration.

The heat dissipated directly into the room air by the Avio 500 ICP-OES is about 2800 watts (660 BTU/ hr), most of which is removed if the system is properly vented. Additionally, the chiller dissipates about 3000 watts directly into the room.

PerkinElmer®
For the Better

Exhaust Vent

The Avio 500 ICP-OES requires one vent for the ICP torch connected directly to the top of the instrument. The torch venting system is required to remove combustion fumes and vapors from the torch housing. Exhaust venting is important for a number of reasons:

- It will protect laboratory personnel from toxic vapors that may be produced by some samples.
- It will tend to minimize the effects of room drafts and the laboratory atmosphere on ICP torch stability.
- It will help to protect the instrument from corrosive vapors that may originate from the samples.
- It will remove dissipated heat that is produced by the ICP torch and RF power supply. The venting system should provide a flow rate at least 3398 L/min (120 CFM) and a maximum flow rate of 5663 L/min (200 CFM). The temperatures of the exhaust gases upon exiting the instrument are about 80 °C (176 °F) at 1500 watts of RF power.

WARNING

The use of ICP-OES instruments without adequate ventilation to outside air may constitute a health hazard. For example, the combustion of halogenated hydrocarbon produces toxic vapors. Extreme care should be taken that exhaust gases are vented properly.

The exhaust duct is connected directly to the top of the Avio 500 instrument and it is recommended to use the 4-inch (10.16 cm) I.D. flexible ducting provided to make the final connection to the instrument with stainless steel tubing for the rest of the exhaust ducting. The blower capacity depends on the duct length and the number of elbows or bends used to install the system. If an excessively long duct system or a system with many bends is used, a stronger blower may be necessary to provide sufficient exhaust volume. Alternatively, smooth stainless-steel tubing may be used instead of flexible stainless-steel tubing where flexibility is not required to reduce system friction loss or "drag." A length of smooth stainless-steel ducting has 20-30% less friction loss than a comparable length of flexible ducting. When smooth stainless-steel tubing is used, elbows must be used to turn corners. These elbows should turn at a center line radius of 150 mm with a maximum bend angle of 45 degrees to reduce friction losses, and the number of elbows should be minimized.

Additional recommendations on the venting system include:

- Make sure the duct casing is installed using fireproof construction. Route ducts away from sprinkler heads.
- Locate the blower as close to the discharge outlet as possible. All joints on the discharge side should be airtight, especially if toxic vapors are being carried.
- Equip the outlet end of the system with a back draft damper and take the necessary precautions to keep the exhaust outlet away from open windows or inlet vents and to extend it above the roof of the building for proper dispersal of the exhaust.
- Equip the exhaust end of the system with an exhaust stack to improve the overall efficiency of the system.
- Verify the length of the duct that enters into the blower is a straight length, at least ten times the duct diameter. An elbow entrance into the blower inlet causes a loss in efficiency.
- Provide make-up air in the same quantity as is exhausted by the system. An "airtight" lab will cause an efficiency loss in the exhaust system.
- Ensure that the system is drawing properly by releasing smoke into the mouth of the vent. A synthetic "smoke" can be generated by placing open bottles of hydrochloric acid and ammonium hydroxide in the proximity of the vent opening.
- Equip the blower with a pilot light located near the instrument to indicate to the operator when the blower is on.

Vent Positions

The venting system for the ICP torch connects directly to the torch compartment chimney located on top of the sample compartment. Four-inch inner diameter tubing is provided with the Avio 500 ICP-OES for making this connection. For proper instrument venting, order PerkinElmer Venting Kit (Part No. N0790188, 110V; N0790189, 230V).

Figure 1 shows the location of the ICP torch exhaust vent.

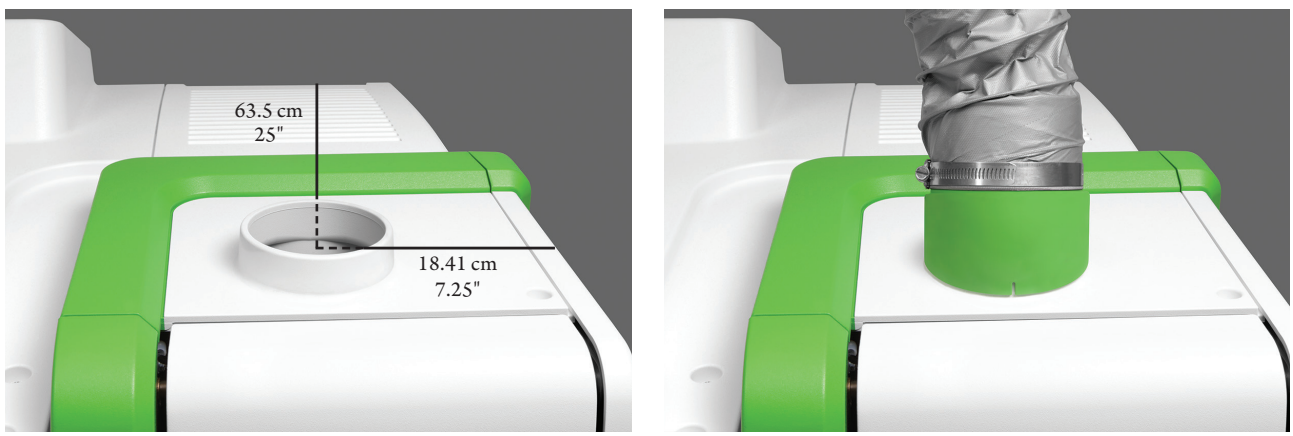

Figure 1. Vent for the Avio 500 ICP torch.

Handling of Gas Cylinders and Other Suggested Safety Practices

- Fasten all gas cylinders securely to an immovable bulkhead or a permanent wall.
- When gas cylinders are stored in confined areas, such as a room, ventilation should be adequate to prevent toxic or explosive accumulations. Move or store gas cylinders only in a vertical position with the valve cap in place.
- Locate gas cylinders away from heat or ignition sources, including heat lamps. Cylinders have a pressure-relief device that will release the contents of the cylinder, if the temperature exceeds 52 °C (125 °F).
- When storing cylinders external to a building, the cylinders should be positioned so that they are protected against temperature extremes (including the direct rays of the sun) and should be stored above ground on a suitable floor.
- Label gas cylinders clearly to identify the contents and status (full, empty, etc.).
- Do not attempt to refill gas cylinders.
- Arrange gas hoses where they will not be damaged or stepped on and where objects will not be dropped on them.
- Perform periodic gas-leak tests by applying a soap solution to all joints and seals.
- Only view the ICP torch through the safety viewing window or with protective eye wear. Do not view directly as hazardous UV radiation may be emitted. Ordinary safety glasses will, in general, provide sufficient protection, but additional side shields will ensure a further margin of safety. Safety glasses will also provide mechanical protection for the eyes.
- ICP-OES instruments generate high amounts of radio-frequency energy in their RF power supply and torch boxes, which is potentially hazardous, if allowed to escape. Safety devices and screening interlocks should not be bypassed or disconnected.
- The power supply of an ICP-OES is capable of generating potentially lethal voltages. No maintenance beyond what's described in the User Hardware Guide and Service Manual should be performed by anyone other than a PerkinElmer Customer Support Engineer or the customer's own PerkinElmer-trained maintenance personnel.
- Water lines should be located away from electrical connections. Condensation and possible leaks may create an unsafe situation, if in proximity to electrical connections.

The above suggestions do not supersede the safety standards outlined by OSHA or other local state and/or country safety organizations governing safe compressed gas cylinder handling and laboratory safety practices.

Gases for the Avio 500 ICP-OES

Argon is used as the ICP torch gas with the Avio 500. Nitrogen is recommended for the optical purge gas, although argon can be used as well. The quality criteria for the argon and the nitrogen are shown in Table 1.

Table 1. Argon and Nitrogen Quality Criteria.

Specification	Argon	Nitrogen
Purity	≥ 99.996%	≥ 99.999%
Oxygen	≤ 5 ppm	≤ 5 ppm
Water	≤ 4 ppm	≤ 5 ppm
Nitrogen	≤ 20 ppm	
Hydrogen		≤ 1 ppm
Hydrocarbons		≤ 1 ppm

Either liquid or gaseous argon can be used with an ICP-OES system, although liquid is recommended. The choice of liquid argon or gaseous argon tanks is determined primarily by the availability of each and the usage rate. Liquid argon is usually less expensive per unit volume to purchase, but cannot be stored for extended periods. If liquid argon is used, the tank should be fitted with an over-pressure regulator, which will vent the tank as necessary to prevent the tank from becoming a safety hazard. Gas transfer lines from the argon tank should be contaminant-free and not made of plastic.

It is highly recommended that the optical path be purged with either nitrogen or argon. Nitrogen is the recommended purge gas due to its lower cost. Normal purge gas usage is user-selectable at either 1.5 L/min (low purge) or 8 L/min (high purge) for nitrogen (1.4 L/min or 7 L/min if argon is used) at 365 kPa (50 psig) pressure.

Gaseous argon tanks do not require venting and consequently can be stored for extended periods without loss. The available argon pressure should be between 550 and 825 kPa (80-120 psig). Liquid argon and nitrogen may be purchased from your gas supplier. The Avio 500 ICP-OES spectrometer includes the hoses necessary for connecting the argon and nitrogen to the instrument (0.25-inch Swagelok® connection).

For the Avio 500, typical argon consumption for the torch gas is 9 SLPM while the plasma is running in low-flow condition and 1 SLPM for detector purge at all times while the instrument is powered on; for an instrument running 8 hours per day and 5 days per week at low flow, this would result in a consumption rate of approximately 32,000 SL per week. At that rate, a typical 160-liter liquid argon tank would last approximately four weeks, depending on storage conditions; a typical 8000 liter compressed argon cylinder would last approximately 1.8 days.

The argon gas regulator should provide a delivery pressure between 80 and 120 psi (550 to 825 kPa). The nitrogen purge gas regulator should provide a delivery pressure between 40 and 120 psig (275 to 825 kPa). A cylinder regulator that can be used with argon and nitrogen is available from PerkinElmer (Part No. 03030284). The regulator can be used with CGA 580 or CGA 590 fittings.

PlasmaShear™

The Avio 500 ICP-OES uses a shear gas to remove the plasma plume and to keep the heat away from the optics. Either clean air or nitrogen can be used for the shear gas. The shear flow is 28 L/min (1 cubic foot/min) at a minimum of 550 kPa (80 psig). While cylinders of compressed air can be used, an air compressor is more practical. However, because the shear gas must be clean and dry, the Avio 500 includes an installable air-dryer assembly. The air hoses are supplied with 0.25-inch Swagelok® fittings and the assembly mounts on the lab wall. In humid environments, this may not be adequate to ensure that the compressed air is dry. Additional filters or condensers may be a necessary part of the air supply system.

Drain Vessels

A drain vessel (Part No. 09200486) and end cap (Part No. N0690271) are supplied with the Avio 500 ICP-OES systems. The vessel is made of plastic and is used to gather the effluent from the ICP torch. The drain vessel should be placed on the floor in front of the ICP-OES. The drain vessel should not be stored in an enclosed storage area. The drain system should be checked regularly and replaced when necessary. Should it become necessary to replace the drain vessel, it should be made from a material not likely to be impacted by samples being analyzed. Glass or other brittle materials must not be used. Separate drain vessels must be used for acid-containing aqueous and organic samples.

Location

Typically, the Avio 500 ICP-OES is positioned with the computer and printer on the bench next to the instrument or on an adjacent table. The computer and printer must not be placed on the instrument. A bench for the instrument is available (Part No. N0782060). The dimensions are listed right (Figure 2).

The instrument must be placed under the exhaust vent for the torch compartment and near the electrical, water, and gas supply points.

The instrument is supplied with a power cord 2.5 m (8 ft.) long and the following hoses:

- Argon and nitrogen hoses: 6.0 m (20 ft.)
- Water hoses (2): 3.7 m (12 ft.)
- Air hose for shear gas*: 3.7 m (12 ft.)

* *The air dryer filter should be located within the 3.7 m (146 in.) length of the air hose.*

Electrical Services

NOTICE: A means of electrically grounding the instrument must be available.

The Avio 500 instrument is equipped with a 2.5 m (8 ft.) power cable that supplies both the spectrometer and the RF generator. Under full instrument load, the Avio 500 requires a 200-230 V, 2800 VA, 50/60 Hz (±1%) 20A line with a separate dedicated circuit breaker. Only single-phase power is needed.

The line should be rated at 15 amps. The Avio 500 ICP-OES has a maximum power consumption of 2800 VA.

NOTICE: The Avio 500 ICP-OES must not have a Ground Fault Circuit Interrupter (GFCI) protected outlet. The instrument will trip the interrupter if this type of outlet protection is used.

The Avio 500 ICP-OES is equipped with an IEC 60309 250 V 16/20 A 2-pole plus protective earth plug (Walther Part No. 211306, PerkinElmer Part No. 09997530) that inserts into a receptacle (Walther Part No. 410306, PerkinElmer Part No. 09290304). Alternative surface mount receptacle (Walther Part No. 111306, PerkinElmer Part No. 09290305). Both receptacles are shipped with the instrument.

NOTICE: Do not replace the IEC 60309 instrument power plug.

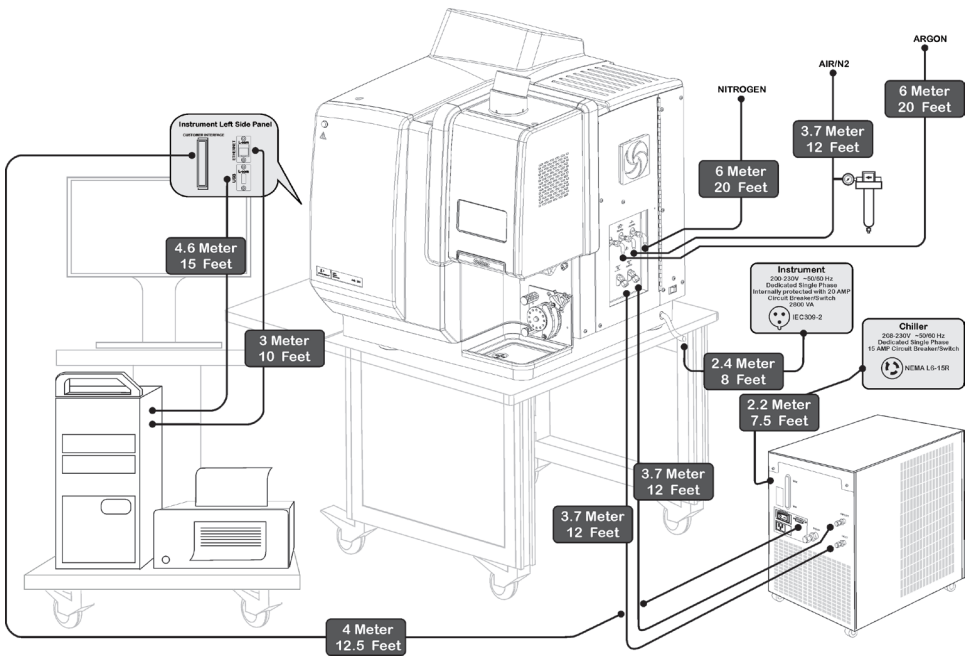

Figure 2. Location and length of connections.

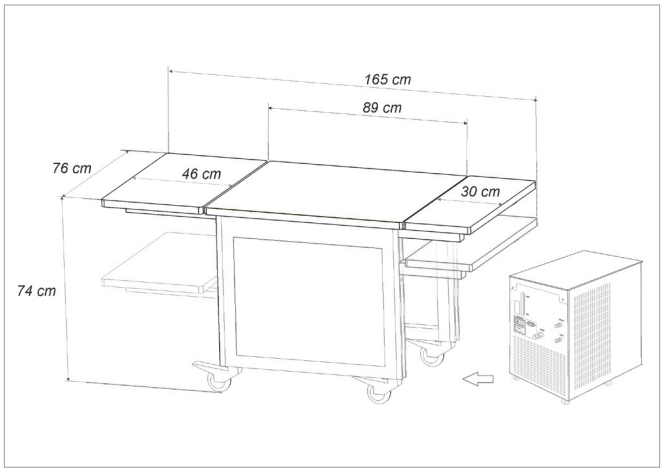

Figure 3. Bench for the Avio 500 ICP-OES (Part No. N0782060).

Cooling Requirements

The Avio 500 ICP-OES requires a recirculating cooling system (chiller) to dissipate heat from the oscillator. The requirements for the chiller are:

- Cooling Capacity at 20 °C: 2850 watts
- Temperature Stability: ±0.5 °C
- Pump Rate: 4 gal/min at 55 psi max

A PolyScience® WhisperCool™ Recirculating Chiller meets these requirements and is recommended for the instrument. The PolyScience® WhisperCool™ is available through PerkinElmer in the following two configurations: 208-230 V, 50 Hz (Part No. N0772045); 208-230 V, 60 Hz (Part No. N0772046).

An additional 200-240 V line is required for the chiller. A Hubbell® number 4560 receptacle (NEMA L6-15R configuration) is supplied with the PolyScience® WhisperCool™ Chiller.

Summary: Facilities Required

Tables 2 and 3 provide the power requirements and dimensions, respectively, for the Avio 500 ICP-OES and its major accessories.

Figure 4. Avio 500 ICP-OES spectrometer dimensions.

The Avio 500 will operate normally at a range of 200-230 V and within 1 Hz of the specified frequency. If the power line is unstable, fluctuates in frequency, or is subject to surges, additional control of the incoming power may be required.

The ANSI-IEEE C62.41* recommends the noise level to be <10 volts normal mode (signal to ground) and <1/2 volt common mode** (neutral to ground) for the AC power input. This can be verified by an oscilloscope or power meter.

* *American National Standards Institute (ANSI) is a private, non-profit organization that administers and coordinates the U.S. voluntary standards.*

* *Institute of Electrical and Electronics Engineers (IEEE) is a professional association with its corporate office in New York City.*

** *Excessive common mode (neutral to ground) noise can be caused by a poor building ground. The NEC (National Electrical Code) requires that the building ground resistance does not exceed 25 ohms. This can be verified with an earth ground test.*

Table 2. Services required for the Avio 500 ICP-OES system. The Avio 500 is a computer-controlled, bench-mounted instrument, with one exhaust vent.

Gases	Argon	550-825 kPa	1-25 L/min	
	Nitrogen	220-825 kPa	1.5-8 L/min	
Shear Gas	Air or Nitrogen	550-825 kPa	25 L/min	
Coolant		310-550 kPa	4 L/min (1 gal/min)	15-25 °C (59-77 °F)
Power	Avio 500 ICP-OES	200-230 V (under full instrument load)	50/60 Hz	16/20-amp single-phase
	Computer and Printer	115 V	60 Hz	
		230 V	50 Hz	
	PolyScience® 6106PE	208-230 V	60 Hz	15-amp single-phase
		208-230 V	50 Hz	15-amp single-phase or 13-amp single-phase (U.K.)

Table 3. Dimensions of Avio 500 ICP-OES and Accessories.

Product	Width	Height	Depth	Power	Weight
Avio 500 ICP-OES	76 cm (29.9 in.)	87 cm (34.4 in.)	84 cm (33.1 in.)	2800 watts	163 kg (360 lb)
Note: Depth with lifting handles is 96 cm (37.8 in.); Weight with lifting handles is 235 kg (518 lb) in shipping container with accessories					
S10 Autosampler	46 cm (18.1 in.)	53 cm (20.9 in.)	38 cm (14.9 in.)	250 watts	5 kg (11 lb)
HP® LaserJet® Printer*	42 cm (16.5 in.)	38 cm (14.8 in.)	45 cm (17.8 in.)	330 watts	20.4 kg (45 lb)
Computer Keyboard	48.3 cm (19 in.)	4.3 cm (1.7 in.)	21.6 cm (8.5 in.)	–	2 kg (4 lb)
Computer CPU (minitower)*	18 cm (7.1 in.)	42.6 cm (16.8 in.)	44.7 cm (17.6 in.)	200 watts	10 kg (22 lb)
Computer Monitor 24" flat panel	56.0 cm (22 in.)	43.6 cm (17.2 in.)	17.2 cm (6.8 in.)	300 watts	6.8 kg (15 lb)
PolyScience® WhisperCool™ Chiller	36.5 cm (14.5 in.)	61 cm (24 in.)	67.3 cm (26.5 in.)	2000 watts	81 kg (178 lb)

** Typical dimensions for PerkinElmer-supplied printers and computers.*

Important Accessories and Consumables

POLYSCIENCE® WHISPERCOOL™ CHILLER

Part No.	N0772046	N0772045
Electrical Requirements	208-230 V, 60 Hz, 15 A	240 V, 50 Hz, 15 A
Operating Temperature Range	-10 to 40 °C	
Temperature Stability	±0.1 °C (±1.8 °F)	
Cooling Capacity	at 20 °C 2900 Watts (9889 BTU/hr)	
	at 10 °C 1925 Watts (6574 BTU/hr)	
	at 0 °C 1000 Watts (3410 BTU/hr)	
Compressor	1.0 HP	
Reservoir Capacity	4.2 L	
Pump Type	Turbine	
Maximum Pump Pressure	90 PSI	
Maximum Pump Flow	13.2 LPM	
Replacement Air Filter	N0777095 (Air Filter with Frame, 13 x 14")	
Chiller Coolant Mix	N0776200 (Five Half-gallon Bottles)	

LINE CONDITIONERS AND UPS SYSTEMS

Description	Part No.
LINE CONDITIONERS	
3.8 KVA Line Conditioner 60 Hz	N9307512
3.6 KVA Line Conditioner 50 Hz	N9307522
UPS SYSTEMS	
5.2 KVA True On-Line Power Conditioned UPS 50/60 Hz	N0777511
PROBE	
Power Probe 0-250 V Input 50/60 Hz	N3151391

COMPRESSORS

Each compressor comes assembled on an internally and externally coated air tank and includes a self-purging regenerative dryer with aftercooler. If customers choose to supply their own compressors, they must meet specifications in the following table to guarantee performance and minimal maintenance.

Description	Part No. (115 V/60 Hz)	Part No. (220 V/50 Hz)	Part No. (220 V/60 Hz)
Compressor	N0777602	N0777603	N0777604
Compressor with Enclosure	N0777605	N0777606	N0777607

Product meets both U.S. and Canadian CSA standards. ASME® Certified tank.

COMPRESSOR SPECIFICATIONS

Parameter	Value
Horse Power (Hp)	1.5
Output (CFM)	6.0
Output (L/min)	170
Max Pressure (psi)	120
Max Pressure (bar)	8
Operating Pressure (psi)	90-120
Operating Pressure (bar)	6-8
Oil (ppm)	0.01
Dust (ppm)	0.01
Pressure Dew Point (°C)	-40
Noise Level (dB/A)	75 – with Enclosure: 55
Tank Size (gal)	13
Tank Size (L)	50
Dimensions (in.)	16 x 26 x 35 – with Enclosure: 29 x 23 x 30
Weight (lb)	119 – with Enclosure: 207
Packed Dimensions (in.)	33 x 28 x 43 – with Enclosure: 33 x 28 x 3
Packed Weight (lb)	135 – with Enclosure: 264

REPLACEMENT PARTS

Description	Part No.
Replacement Air Intake Filter	N0777608
Micron Dryer Filter Element	N0777609
Replacement Piston Assembly	N0777610
Replacement Reed Valve	N0777611
Replacement Head Gasket	N0777612

Every day, you can count on PerkinElmer to provide you with solutions that deliver reliable performance, control operating costs, and maximize operational time. Our complete portfolio of consumables, parts, supplies, training, and service helps you meet both routine and demanding measurement challenges. We invest heavily in testing and validating our products to ensure you receive guaranteed compatibility and performance – on-time, for every instrument in your laboratory.

Always keep spares on hand!

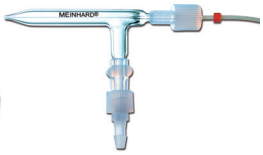

For a complete listing of ICP consumables, please visit www.perkinelmer.com/supplies

PerkinElmer, Inc.
940 Winter Street
Waltham, MA 02451 USA
P: (800) 762-4000 or
(+1) 203-925-4602
www.perkinelmer.com

For a complete listing of our global offices, visit www.perkinelmer.com/ContactUs

013390D_01 09931368E PKI